Variational Principles and Topological Constants of Motion for Non-Barotropic Magnetohydrodynamics

Asher Yahalom

PPPL Theory Seminar
Princeton University
12.11.2019

Contents

Introduction

Basic Quantities

1. **The magnetic field** $\vec{B}$ **3 functions.**
2. **The velocity field** $\vec{V}$ **3 functions.**
3. **The density field** ρ **1 function.**
4. **The specific entropy s 1 function.**

Total of 8 functions.

Derived quantities

Current:

$$\vec{J} = \frac{\vec{\nabla} \times \vec{B}}{4\pi}$$

Pressure:

$$P(\rho, s)$$

For non-Barotropic flows, (the general case).

Basic Equations

$$\frac{\partial \vec{B}}{\partial t} = \vec{\nabla} \times (\vec{v} \times \vec{B})$$

$$\vec{\nabla} \cdot \vec{B} = 0$$

$$\frac{\partial \rho}{\partial t} + \vec{\nabla} \cdot (\rho \vec{v}) = 0$$

$$\rho \frac{d\vec{v}}{dt} = \rho(\frac{\partial \vec{v}}{\partial t} + (\vec{v} \cdot \vec{\nabla})\vec{v}) = -\vec{\nabla} p + \frac{(\vec{\nabla} \times \vec{B}) \times \vec{B}}{4\pi}$$

7 equations – one equation is just an initial condition requirement.

Basic Equations

$$\frac{ds}{dt} = \frac{\partial s}{\partial t} + \vec{v} \cdot \vec{\nabla} s = 0$$

Total of 8 equations for 8 functions.

Content of the Equation

$$\vec{\nabla} \cdot \vec{B} = 0$$

The total magnetic field flux into a closed volume is null – what comes in must come out.

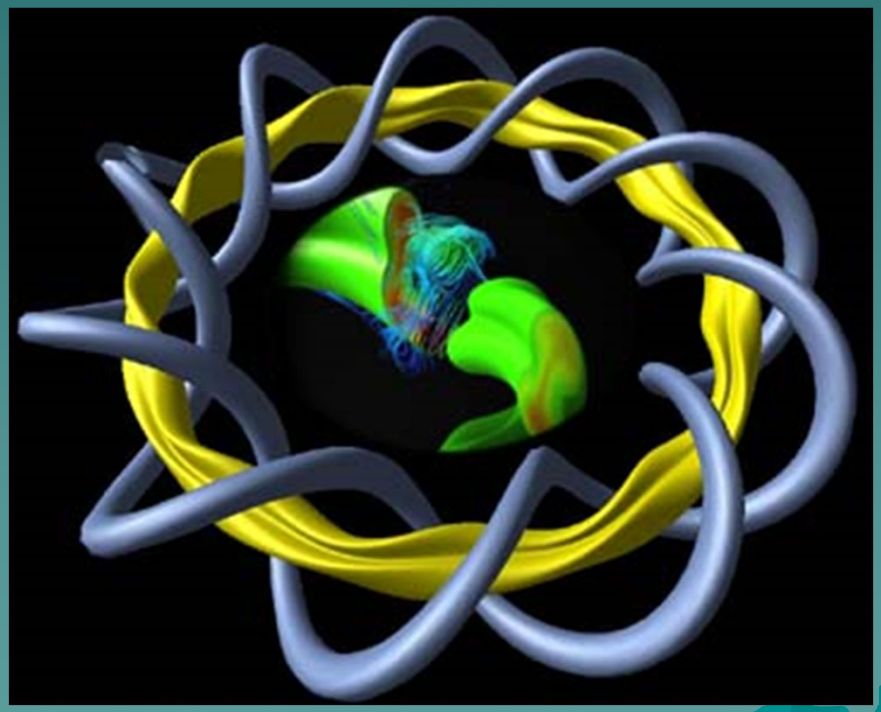

The MHD approximation

$$\frac{\partial \vec{B}}{\partial t} = \vec{\nabla} \times (\vec{v} \times \vec{B})$$

The magnetic field lines are co-moving that is they move with the fluid.

Hence the topology of the field lines is conserved.

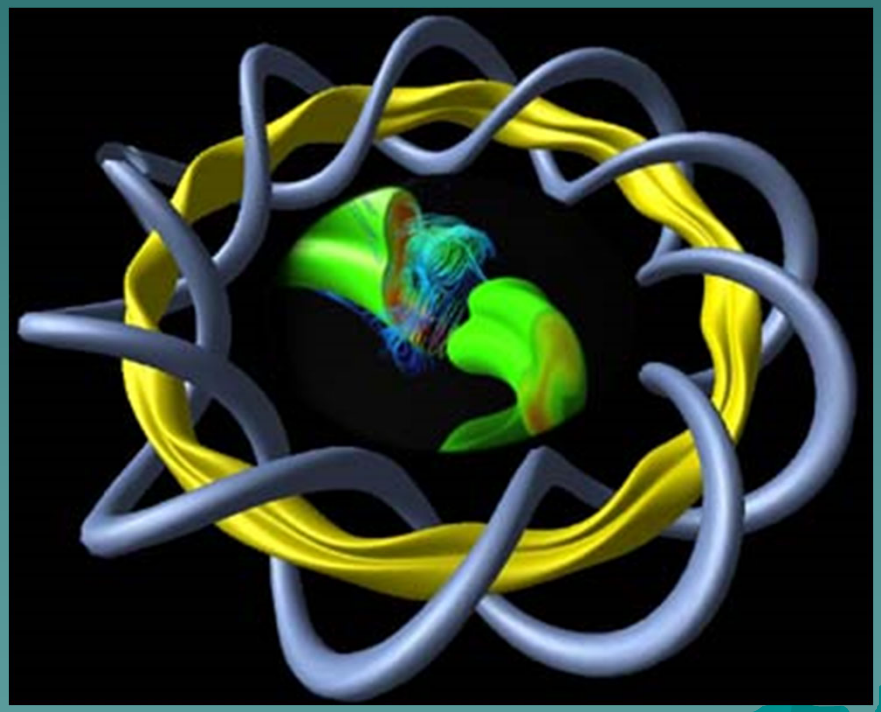

Physical Content of the Equation

Ohms law:

$$\vec{J} = \sigma\left(\vec{E} + \vec{v} \times \vec{B}\right)$$

Take the limit:

$$\lim \frac{\vec{J}}{\sigma} = 0$$

(Current density over Conductivity small)

$$\vec{E} = -\vec{v} \times \vec{B}$$

Physical Content of the Equation

$$\vec{E} = -\vec{v} \times \vec{B}$$

Faraday's law:

$$\frac{\partial \vec{B}}{\partial t} = -\vec{\nabla} \times \vec{E}$$

$$\frac{\partial \vec{B}}{\partial t} = \vec{\nabla} \times (\vec{v} \times \vec{B})$$

Content of the equations

$$\frac{\partial \rho}{\partial t} + \vec{\nabla} \cdot (\rho \vec{v}) = 0$$

The continuity equation – mass is conserved.

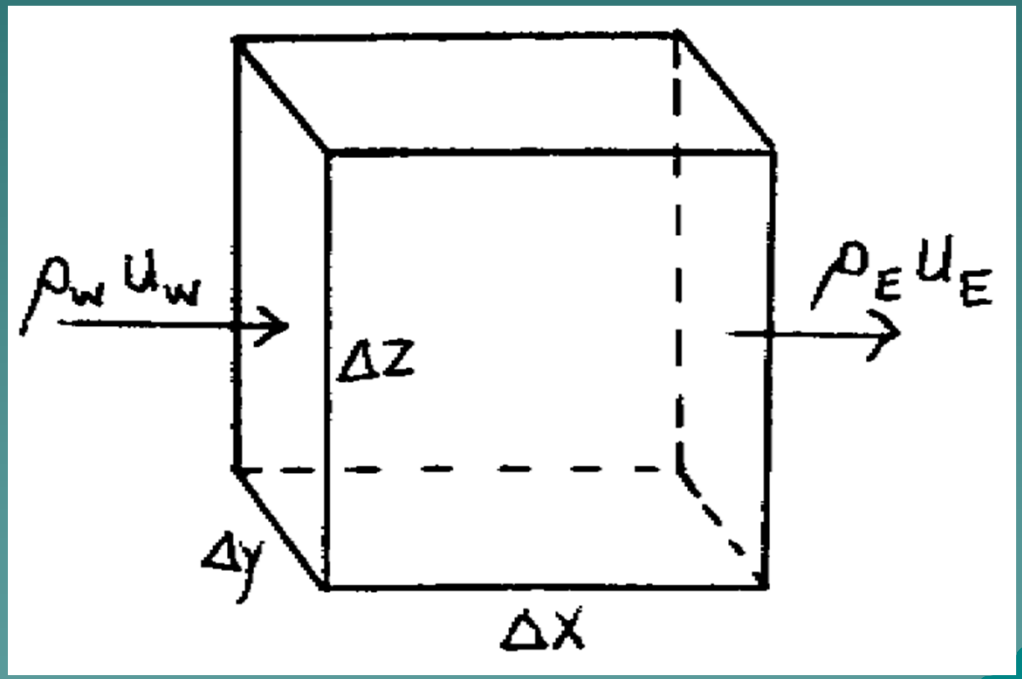

Content of the equations

$$\rho\frac{d\vec{v}}{dt} = \rho(\frac{\partial\vec{v}}{\partial t} + (\vec{v}\cdot\vec{\nabla})\vec{v}) = -\vec{\nabla}p + \frac{(\vec{\nabla}\times\vec{B})\times\vec{B}}{4\pi}$$

The Euler equation: Newton's second law for continuous matter moving under the influence of pressure and magnetic forces .

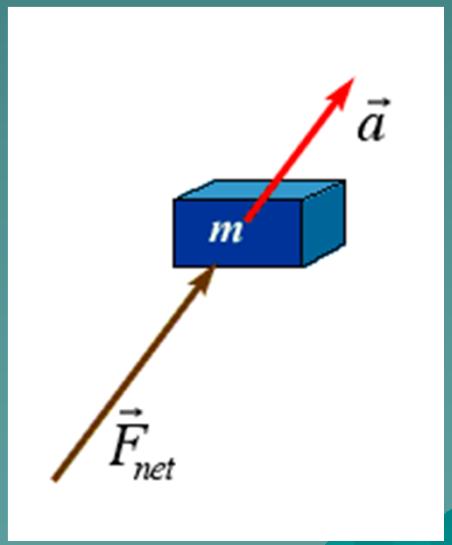

Physical Content

$$\frac{ds}{dt} = \frac{\partial s}{\partial t} + \vec{v} \cdot \vec{\nabla} s = 0$$

Heat is not created (zero viscosity, zero resistivity) and is not conducted only convection occurs.

Eulerian Variational Principles & Topological Constants of Motion

Questions

1. **Can those equations be derived from a variational principle?**
2. **Can the numbers of functions describing the problem be reduced?**

Bibliography

- Asher Yahalom and Donald Lynden-Bell "Simplified Variational Principles for Barotropic Magnetohydrodynamics". [Los-Alamos Archives - physics/0603128], Journal of Fluid Mechanics, Volume 607, pages 235-265 (2008).

- Asher Yahalom "A Four Function Variational Principle for Barotropic Magnetohydrodynamics". EPL 89 (2010) 34005, doi: 10.1209/0295-5075/89/34005 [Los-Alamos Archives - arXiv: 0811.2309].

- Asher Yahalom, "A New Diffeomorphism Symmetry Group of Magnetohydrodynamics" submitted to the Proceedings of the 9th International Workshop "Lie Theory and Its Applications in Physics" (LT-9), 20-26 June 2011, Varna, Bulgaria.

- Asher Yahalom "Aharonov - Bohm Effects in Magnetohydrodynamics" Physics Letters A. Available online 22 May 2013. Volume 377, Issues 31–33, 30 October 2013, Pages 1898–1904.

- Asher Yahalom "Variational Analysis of Topological Stationary Barotropic MHD in the Case of Single Valued Magnetic Surfaces" Journal of Physics: Conference Series 544 (2014) 012009 doi:10.1088/1742-6596/544/1/012009.

- Asher Yahalom "Simplified Variational Principles for non-Barotropic Magnetohydrodynamics". Journal of Plasma Physics (2016), vol. 82, 905820204, Cambridge University Press 2016
- Asher Yahalom "Simplified Variational Principles for Stationary non-Barotropic Magnetohydrodynamics" International Journal of Mechanics, Volume 10, 2016, p. 336-341. ISSN:

- Asher Yahalom "Non-Barotropic Magnetohydrodynamics as a Five Function Field Theory". International Journal of Geometric Methods in Modern Physics, No. 10 (November 2016). Vol. 13 1650130 (13 pages) © World Scientific Publishing Company, DOI: 10.1142/S0219887816501309.

- Asher Yahalom "A Conserved Local Cross Helicity for Non-Barotropic MHD" (ArXiv 1605.02537). Pages 1-7, Journal of Geophysical & Astrophysical Fluid Dynamics. Published online: 25 Jan 2017. http://dx.doi.org/10.1080/03091929.2017.1281410 .

- Asher Yahalom "Non-Barotropic Cross-helicity Conservation Applications in Magnetohydrodynamics and the Aharanov - Bohm effect" (arXiv:1703.08072 [physics.plasm-ph]). Fluid Dynamics Research, Volume 50, Number 1, 011406. https://doi.org/10.1088/1873-7005/aa6fc7 . Received 11 December 2016, Accepted Manuscript online 27 April 2017, Published 30 November 2017.

- A. Yahalom

"Metage Symmetry Group of Non – Barotropic Magnetohydrodynamics and the Conservation of Cross Helicity". In: Dobrev V. (eds) Quantum Theory and Symmetries with Lie Theory and Its Applications in Physics Volume 2. LT-XII/QTS-X 2017. Springer Proceedings in Mathematics & Statistics, vol 255. Springer Nature, Singapore (arXiv:1801.06443 [physics.plasm-ph]).

- Asher Yahalom "A New Diffeomorphism Symmetry Group of Non-Barotropic Magnetohydrodynamics" Proceedings of the 32nd International Colloquium on Group Theoretical Methods in Physics (Group32), Czech Technical University, Prague, Czech Republic, 9-13 July 2018. Journal of Physics: Conf. Series 1194 (2019) 012113, IOP Publishing

- Asher Yahalom "Topological Bounds from Label Translation Symmetry of Non-Barotropic MHD" submitted.

Sakurai's Idea

T. Sakurai, Pub. Ast. Soc. Japan **31** 209 (1979)

Let us represent the magnetic field lines as intersection of two co-moving surfaces χ and η. (Euler potentials)

This is essentially introducing a coordinate system connected to the magnetic field lines. The third coordinate parameterizes the distance along the magnetic field lines and was denoted "Magnetic Metage" μ by Yahalom & Lynden-Bell (2008).

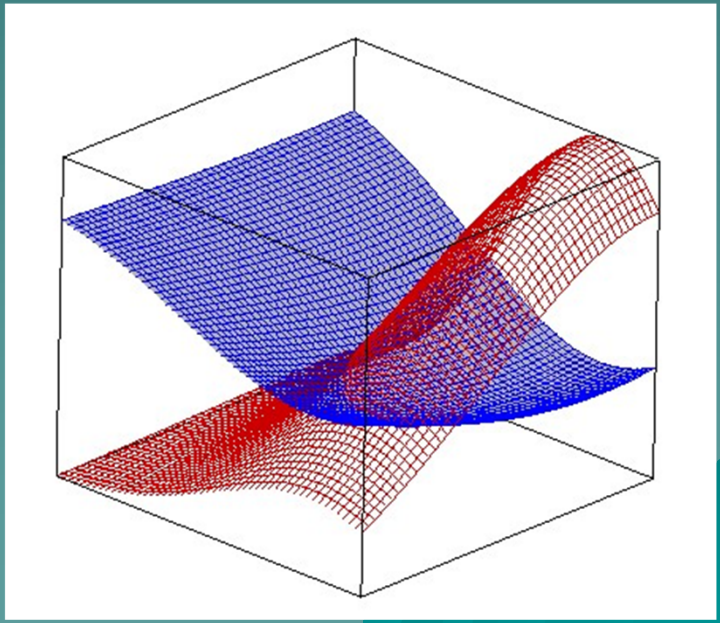

Suppose:

$$\vec{B} = \vec{\nabla}\chi \times \vec{\nabla}\eta$$

The magnetic field lines are an intersection of two surfaces (Euler potentials)-this is true only for some field topologies.

$$\frac{d\chi}{dt} = 0, \qquad \frac{d\eta}{dt} = 0$$

The surfaces are co-moving

Economy

The two equations:

$$\frac{d\chi}{dt} = 0, \qquad \frac{d\eta}{dt} = 0$$

Replace the four equations:

$$\vec{\nabla} \cdot \vec{B} = 0$$

$$\frac{\partial \vec{B}}{\partial t} = \vec{\nabla} \times (\vec{v} \times \vec{B})$$

The Variational Principle

$$A \equiv \int \mathcal{L} d^3x dt$$

$$\begin{aligned}
\mathcal{L} &\equiv \mathcal{L}_1 + \mathcal{L}_2, \\
\mathcal{L}_1 &\equiv \rho(\frac{1}{2}\vec{v}^2 - \varepsilon(\rho, s)) + \frac{\vec{B}^2}{8\pi}, \\
\mathcal{L}_2 &\equiv \nu[\frac{\partial \rho}{\partial t} + \vec{\nabla} \cdot (\rho \vec{v})] - \rho\alpha\frac{d\chi}{dt} - \rho\beta\frac{d\eta}{dt} - \rho\sigma\frac{ds}{dt} - \frac{\vec{B}}{4\pi} \cdot \vec{\nabla}\chi \times \vec{\nabla}\eta
\end{aligned}$$

$$A \equiv \int \mathcal{L} d^3x dt$$

Is the Action

$$\mathcal{L}$$

Is the Lagrangian density

$$\mathcal{L}_1 \equiv \rho(\frac{1}{2}\vec{v}^2 - \varepsilon(\rho, s)) + \frac{\vec{B}^2}{8\pi}$$

The first part of the Lagrangian density contains the Kinetic Energy term and two potential energy terms, one is due to the internal energy (pressure & entropy) and the other is due to magnetic fields.

$$\mathcal{L}_2 \equiv \nu[\frac{\partial \rho}{\partial t} + \vec{\nabla} \cdot (\rho \vec{v})] - \rho\alpha\frac{d\chi}{dt} - \rho\beta\frac{d\eta}{dt} - \rho\sigma\frac{ds}{dt} - \frac{\vec{B}}{4\pi} \cdot \vec{\nabla}\chi \times \vec{\nabla}\eta$$

The second part of the Lagrangian density contains four terms which enforce by using Lagrange multipliers:

1. The equation of continuity.

2. The existence of two comoving surfaces.

3. The conservation of entropy.

4. The magnetic field lines being at the intersection of those two surfaces.

The Variational Equations

Variation with respect to nu, alpha and beta yields the continuity equations and two equations that express the fact that surfaces chi and eta are co-moving:

$$\frac{\partial \rho}{\partial t} + \vec{\nabla} \cdot (\rho \vec{v}) = 0$$

$$\rho \frac{d\chi}{dt} = 0$$

$$\rho \frac{d\eta}{dt} = 0.$$

The Variational Equations

Variation with respect to sigma yields the entropy equation:

$$\frac{ds}{dt} = 0$$

The Variational Equations

Variation with respect to magnetic field results in the equation:

$$\vec{B} = \hat{\vec{B}} \equiv \vec{\nabla}\chi \times \vec{\nabla}\eta$$

This equation is the Sakurai representation which expresses the fact that the magnetic field lines are the intersection of the two co-moving surfaces.

The Variational Equations

Variation with respect to velocity vector results in the equation:

$$\vec{v} = \vec{\nabla}\nu + \alpha\vec{\nabla}\chi + \beta\vec{\nabla}\eta + \sigma\vec{\nabla}s$$

This equation is a "Clebsch" like representation of the velocity.

The Variational Equations

Variation with respect to the density results in the Bernoulli type equation:

$$\frac{d\nu}{dt} = \frac{1}{2}\vec{v}^2 - w$$

In which w is specific enthalpy.

The Variational Equations

Variation with respect to the entropy results in the sigma equation:

$$\frac{d\sigma}{dt} = T$$

In which $T = \frac{\partial \varepsilon}{\partial s}$ **is the temperature.**

The Variational Equations

Finally variation with respect to chi and eta results in the equations:

$$\frac{d\alpha}{dt} = \frac{\vec{\nabla}\eta \cdot \vec{J}}{\rho}, \qquad \frac{d\beta}{dt} = -\frac{\vec{\nabla}\chi \cdot \vec{J}}{\rho}$$

Relations to the Physical Equations

The two equations:

$$\frac{d\chi}{dt} = 0, \qquad \frac{d\eta}{dt} = 0$$

Replace the four equations:

$$\vec{\nabla} \cdot \vec{B} = 0$$

$$\frac{\partial \vec{B}}{\partial t} = \vec{\nabla} \times (\vec{v} \times \vec{B})$$

Relations to the Physical Equations

Mass conservation is also assured:

$$\frac{\partial \rho}{\partial t} + \vec{\nabla} \cdot (\rho \vec{v}) = 0$$

Relations to the Physical Equations

The Euler equations are obtained by:

$$\frac{d\vec{v}}{dt} = \frac{d\vec{\nabla}\nu}{dt} + \frac{d\alpha}{dt}\vec{\nabla}\chi + \alpha\frac{d\vec{\nabla}\chi}{dt} + \frac{d\beta}{dt}\vec{\nabla}\eta + \beta\frac{d\vec{\nabla}\eta}{dt} + \frac{d\sigma}{dt}\vec{\nabla}s + \sigma\frac{d\vec{\nabla}s}{dt}$$

After substituting the relevant equations we obtain the Euler equations

$$
\begin{aligned}
\frac{d\vec{v}}{dt} &= -\vec{\nabla} v_k \left(\frac{\partial \nu}{\partial x_k} + \alpha \frac{\partial \chi}{\partial x_k} + \beta \frac{\partial \eta}{\partial x_k} + \sigma \frac{\partial s}{\partial x_k}\right) + \vec{\nabla}\left(\frac{1}{2}\vec{v}^2 - w\right) + T\vec{\nabla} s \\
&+ \frac{1}{\rho}\left((\vec{\nabla}\eta \cdot \vec{J})\vec{\nabla}\chi - (\vec{\nabla}\chi \cdot \vec{J})\vec{\nabla}\eta\right) \\
&= -\vec{\nabla} v_k v_k + \vec{\nabla}\left(\frac{1}{2}\vec{v}^2 - w\right) + T\vec{\nabla} s + \frac{1}{\rho}\vec{J} \times (\vec{\nabla}\chi \times \vec{\nabla}\eta) \\
&= -\frac{\vec{\nabla} p}{\rho} + \frac{1}{\rho}\vec{J} \times \vec{B}.
\end{aligned}
$$

Intermediate Account

1. We have succeeded in deriving a variational principle for magnetohydrodynamics of the topology assumed.
2. The variational equation contains the 8 physical variables + alpha, beta, nu, chi, eta & sigma 6 functions = 14 functions. This is too much!
3. Solution rearrange terms in the Lagrangian!

The Simplified Variational Principle

$$\mathcal{L} = \hat{\mathcal{L}} + \mathcal{L}_{\vec{v}} + \mathcal{L}_{\vec{B}} + \mathcal{L}_{boundary}$$

$$\hat{\mathcal{L}} \equiv -\rho[\frac{\partial \nu}{\partial t} + \alpha\frac{\partial \chi}{\partial t} + \beta\frac{\partial \eta}{\partial t} + \sigma\frac{\partial s}{\partial t} + \varepsilon(\rho, s) + \frac{1}{2}(\vec{\nabla}\nu + \alpha\vec{\nabla}\chi + \beta\vec{\nabla}\eta + \sigma\vec{\nabla}s)^2] - \frac{1}{8\pi}(\vec{\nabla}\chi \times \vec{\nabla}\eta)^2$$

$$\mathcal{L}_{\vec{v}} \equiv \frac{1}{2}\rho(\vec{v} - \hat{\vec{v}})^2$$

$$\mathcal{L}_{\vec{B}} \equiv \frac{1}{8\pi}(\vec{B} - \hat{\vec{B}})^2$$

$$\mathcal{L}_{boundary} \equiv \frac{\partial(\nu\rho)}{\partial t} + \vec{\nabla}\cdot(\nu\rho\vec{v})$$

The terms:

$$\mathcal{L}_{\vec{v}} \equiv \frac{1}{2}\rho(\vec{v}-\hat{\vec{v}})^2$$

$$\mathcal{L}_{\vec{B}} \equiv \frac{1}{8\pi}(\vec{B}-\hat{\vec{B}})^2$$

Result in the equations:

$$\vec{v} = \hat{\vec{v}} \equiv \vec{\nabla}\nu + \alpha\vec{\nabla}\chi + \beta\vec{\nabla}\eta + \sigma\vec{\nabla}s$$

Generalized Clebsch Representation

$$\vec{B} = \hat{\vec{B}} \equiv \vec{\nabla}\chi \times \vec{\nabla}\eta$$

Sakurai Representation

The magnetic and velocity fields can be calculated using alpha, beta, nu, chi, eta, sigma & s after the relevant equations for those quantities are solved.

Hence we are left with:

$$\mathcal{L} = \hat{\mathcal{L}} + \mathcal{L}_{\vec{v}} + \mathcal{L}_{\vec{B}} + \mathcal{L}_{boundary}$$

$$\hat{\mathcal{L}} \equiv -\rho[\frac{\partial \nu}{\partial t} + \alpha\frac{\partial \chi}{\partial t} + \beta\frac{\partial \eta}{\partial t} + \sigma\frac{\partial s}{\partial t} + \varepsilon(\rho, s) + \frac{1}{2}(\vec{\nabla}\nu + \alpha\vec{\nabla}\chi + \beta\vec{\nabla}\eta + \sigma\vec{\nabla}s)^2] - \frac{1}{8\pi}(\vec{\nabla}\chi \times \vec{\nabla}\eta)^2$$

$$\mathcal{L}_{\vec{v}} \equiv \frac{1}{2}\rho(\vec{v} - \hat{\vec{v}})^2$$

$$\mathcal{L}_{\vec{B}} \equiv \frac{1}{8\pi}(\vec{B} - \hat{\vec{B}})^2$$

$$\mathcal{L}_{boundary} \equiv \frac{\partial(\nu\rho)}{\partial t} + \vec{\nabla}\cdot(\nu\rho\vec{v})$$

Or with:

$$\hat{\mathcal{L}} \equiv -\rho[\frac{\partial \nu}{\partial t} + \alpha\frac{\partial \chi}{\partial t} + \beta\frac{\partial \eta}{\partial t} + \sigma\frac{\partial s}{\partial t} + \varepsilon(\rho, s) + \frac{1}{2}(\vec{\nabla}\nu + \alpha\vec{\nabla}\chi + \beta\vec{\nabla}\eta + \sigma\vec{\nabla}s)^2] - \frac{1}{8\pi}(\vec{\nabla}\chi \times \vec{\nabla}\eta)^2$$

The final Lagrangian contains only 8 functions and yields 8 equations:

$$\frac{\partial \rho}{\partial t} + \vec{\nabla} \cdot (\rho \vec{v}) = 0$$

$$\rho \frac{d\chi}{dt} = 0$$

$$\rho \frac{d\eta}{dt} = 0.$$

$$\frac{d\nu}{dt} = \frac{1}{2}\vec{v}^2 - w$$

$$\frac{d\alpha}{dt} = \frac{\vec{\nabla}\eta \cdot \vec{J}}{\rho}, \qquad \frac{d\beta}{dt} = -\frac{\vec{\nabla}\chi \cdot \vec{J}}{\rho}$$

$$\frac{d\sigma}{dt} = T \qquad \frac{ds}{dt} = 0$$

Analogy to Electromagnetic Theory

Potentials (vector + scalar):

$$\mathbf{E} = -\nabla\phi - \frac{\partial \mathbf{A}}{\partial t}$$

$$\mathbf{B} = \nabla \times \mathbf{A}.$$

$$\mathcal{L} = -\frac{1}{16\pi} F_{\alpha\beta}F^{\alpha\beta} - \frac{1}{c} J_\alpha A^\alpha$$

$$F^{\alpha\beta} = \partial^\alpha A^\beta - \partial^\beta A^\alpha$$

Intermediate Account

1. **We have managed to represent magnetohydrodynamics as a Variational Problem in terms of 8 variables.**
2. **Can one reduce the number of functions further? The answer is probably yes.**

A Simplified Lagrangian

Consider the three equations:

$$\frac{\partial \chi}{\partial t} + (\vec{\nabla}\nu + \alpha\vec{\nabla}\chi + \beta\vec{\nabla}\eta + \sigma\vec{\nabla}s) \cdot \vec{\nabla}\chi = 0$$

$$\frac{\partial \eta}{\partial t} + (\vec{\nabla}\nu + \alpha\vec{\nabla}\chi + \beta\vec{\nabla}\eta + \sigma\vec{\nabla}s) \cdot \vec{\nabla}\eta = 0$$

$$\frac{\partial s}{\partial t} + (\vec{\nabla}\nu + \alpha\vec{\nabla}\chi + \beta\vec{\nabla}\eta + \sigma\vec{\nabla}s) \cdot \vec{\nabla}s = 0$$

Those can be viewed as a set of three equations with three variables for α, β and σ.

$$\alpha_i \equiv (\alpha, \beta, \sigma), \quad \chi_i \equiv (\chi, \eta, s), \quad k_i \equiv -\frac{\partial \chi_i}{\partial t} - \vec{\nabla}\nu \cdot \vec{\nabla}\chi_i, \qquad i \in (1,2,3)$$

$$k_i = \alpha_j \vec{\nabla}\chi_i \cdot \vec{\nabla}\chi_j, \qquad j \in (1,2,3)$$

$$A_{ij} \equiv \vec{\nabla}\chi_i \cdot \vec{\nabla}\chi_j$$

$$k_i = A_{ij}\alpha_j, \qquad j \in (1,2,3)$$

$$A_{ij}^{-1} = |A|^{-1} \begin{pmatrix} A_{22}A_{33} - A_{23}^2 & A_{13}A_{23} - A_{12}A_{33} & A_{12}A_{23} - A_{13}A_{22} \\ A_{13}A_{23} - A_{12}A_{33} & A_{11}A_{33} - A_{13}^2 & A_{12}A_{13} - A_{11}A_{23} \\ A_{12}A_{23} - A_{13}A_{22} & A_{12}A_{13} - A_{11}A_{23} & A_{11}A_{22} - A_{12}^2 \end{pmatrix}$$

$$|A| = A_{11}A_{22}A_{33} - A_{11}A_{23}^2 - A_{22}A_{13}^2 - A_{33}A_{12}^2 + 2A_{12}A_{13}A_{23}$$

$$\alpha_i[\chi_i, \nu] = A_{ij}^{-1} k_j$$

$$\vec{v} = -A_{ij}^{-1}\vec{\nabla}\chi_i\frac{\partial\chi_j}{\partial t}$$

$$\hat{\mathcal{L}}[\chi_i,\nu,\rho] = -\rho[\frac{\partial \nu}{\partial t} + \alpha_k[\chi_i,\nu]\frac{\partial \chi_k}{\partial t}$$
$$+ \quad \varepsilon(\rho,\chi_3) + \frac{1}{2}\vec{v}[\chi_i]^2] - \frac{1}{8\pi}(\vec{\nabla}\chi_1 \times \vec{\nabla}\chi_2)^2$$

$$\hat{\mathcal{L}}[\chi_i, \nu, \rho] = \rho[\frac{1}{2}A^{-1}_{jn}\frac{\partial \chi_j}{\partial t}\frac{\partial \chi_n}{\partial t} + \frac{\partial \nu}{\partial \chi_m}\frac{\partial \chi_m}{\partial t} - \frac{\partial \nu}{\partial t} - \varepsilon(\rho, \chi_3)] - \frac{1}{8\pi}(\vec{\nabla}\chi_1 \times \vec{\nabla}\chi_2)^2.$$

$$\frac{d\nu}{dt} = \frac{1}{2}\vec{v}^2 - w, \frac{\partial \rho}{\partial t} + \vec{\nabla} \cdot (\rho \vec{v}) = 0,$$

$$\frac{d\sigma}{dt} = T, \frac{d\alpha}{dt} = \frac{\vec{\nabla}\eta \cdot \vec{J}}{\rho}, \frac{d\beta}{dt} = -\frac{\vec{\nabla}\chi \cdot \vec{J}}{\rho}$$

A Simplified Hamiltonian

Conjugate momenta:

$$p_\rho = \frac{\partial \tilde{\mathcal{L}}}{\partial \dot{\rho}} = \nu, \qquad \dot{\rho} \equiv \frac{\partial \rho}{\partial t}.$$

$$p_{\chi_k} = \frac{\partial \tilde{\mathcal{L}}}{\partial \dot{\chi}_k} = \rho[A^{-1}_{kj}\frac{\partial \chi_j}{\partial t} + \frac{\partial \nu}{\partial \chi_k}] = -\rho\alpha_k, \qquad \dot{\chi}_k \equiv \frac{\partial \chi_k}{\partial t}.$$

Hamiltonian:

$$
\begin{aligned}
\mathcal{H}[\chi_i, \rho, p_{\chi_k}, p_\rho] &= p_{\chi_k}\dot{\chi}_k + p_\rho\dot{\rho} - \tilde{\mathcal{L}} \\
&= \rho[\frac{1}{2}A^{-1}_{jn}\frac{\partial\chi_j}{\partial t}\frac{\partial\chi_n}{\partial t} + \varepsilon(\rho,\chi_3)] + \frac{1}{8\pi}(\vec{\nabla}\chi_1 \times \vec{\nabla}\chi_2)^2. \\
&= \frac{1}{2}\rho^{-1}A_{kl}p_{\chi_k}p_{\chi_l} - p_{\chi_k}\vec{\nabla}\chi_k \cdot \vec{\nabla}p_\rho + \frac{1}{2}\rho(\vec{\nabla}p_\rho)^2 \\
&+ \rho\varepsilon(\rho,\chi_3) + \frac{1}{8\pi}(\vec{\nabla}\chi_1 \times \vec{\nabla}\chi_2)^2.
\end{aligned}
$$

$$
\mathcal{H} = \frac{1}{2}\rho\vec{v}^2 + \rho\varepsilon + \frac{\vec{B}^2}{8\pi}
$$

The Hamiltonian is just the energy density as expected.

Hamilton's equations:

$$\frac{\delta \mathcal{H}}{\delta p_\rho} = \dot{\rho}$$

$$\frac{\partial \rho}{\partial t} + \vec{\nabla} \cdot (\rho \vec{v}) = 0$$

$$-\frac{\delta \mathcal{H}}{\delta \rho} = \dot{p}_\rho$$

$$\frac{d\nu}{dt} = \frac{1}{2}\vec{v}^2 - w$$

$$\frac{\delta \mathcal{H}}{\delta p_{\chi_k}} = \dot{\chi}_k$$

$$\rho \frac{d\chi}{dt} = 0,$$

$$\rho \frac{d\eta}{dt} = 0.$$

$$\rho \frac{ds}{dt} = 0.$$

$$-\frac{\delta \mathcal{H}}{\delta \chi_k} = \dot{p}_{\chi_k}$$

$$\frac{d\alpha}{dt} = \frac{\vec{\nabla}\eta \cdot \vec{J}}{\rho}, \qquad \frac{d\beta}{dt} = -\frac{\vec{\nabla}\chi \cdot \vec{J}}{\rho},$$

$$\frac{d\sigma}{dt} = T.$$

Intermediate Account

It is shown that non-barotropic magnetohydrodynamics can be derived from a variational principle of five functions:

$$\nu, \rho, \chi, \eta, s$$

In addition to the density and entropy, we need two surfaces on which the magnetic field lines lie and an additional Bernoulli type function.

Hamiltonian and Lagrangian densities are given in terms of the above quantities.

Topological Constant

(WOLTJER L, . 1958a Proc. Nat. Acad. Sci. U.S.A. 44, 489-491.
WOLTJER L, . 1958b Proc. Nat. Acad. Sci. U.S.A. 44, 833-841.
Moffatt, H. K. 1969 J. Fluid Mech. 35, 117.)

Cross Helicity

$$H_C \equiv \int \vec{B} \cdot \vec{v} d^3x$$

Cross Helicity

$$H_C \equiv \int \vec{B} \cdot \vec{v} d^3x$$

Characterizing the degree of cross-knottiness of the magnetic field and velocity lines.

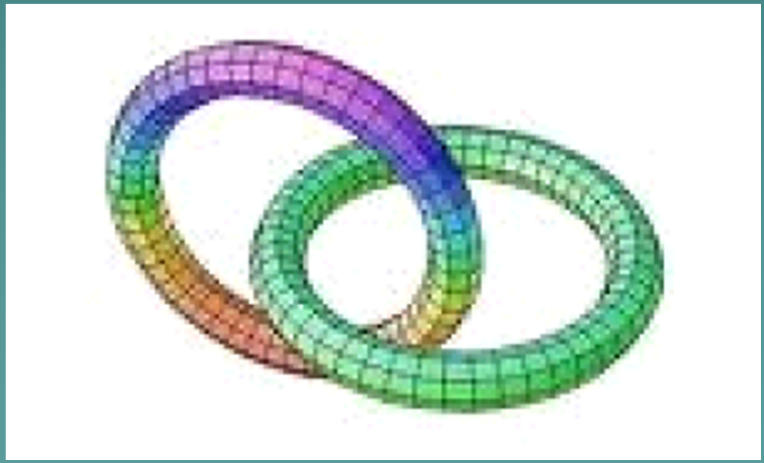

Cross Helicity is **not** conserved in non-barotropic MHD (as opposed to barotropic MHD)

$$\frac{dH_C}{dt} = \int T\vec{\nabla}S \cdot \vec{B} d^3x$$

Question: What is the analogous topological conserved quantity in non-barotropic MHD?

Answer: This can be determined from the variational equations.

We know:

$$\frac{d\nu}{dt} = \frac{1}{2}\vec{v}^2 - w$$

Since the right hand side is single valued so must be the left hand side, hence:

$$\frac{\mathrm{d}[\nu]}{\mathrm{d}t} = 0$$

Let us calculate the cross helicity in terms of the variational variables:

$$\vec{B} = \vec{\nabla}\chi \times \vec{\nabla}\eta$$

$$\vec{v} = \vec{\nabla}\nu + \alpha\vec{\nabla}\chi + \beta\vec{\nabla}\eta + \sigma\vec{\nabla}s$$

In:

$$H_C \equiv \int \vec{B} \cdot \vec{v} d^3x$$

The result is:

$$H_C = \int d\Phi[\nu] + \int d\Phi \oint \sigma dS$$

$$d\Phi = \vec{B} \cdot d\vec{S} = \vec{\nabla}\chi \times \vec{\nabla}\eta \cdot d\vec{S} = d\chi\, d\eta$$

The line integral is along the magnetic field line.

This suggests a modified topological constant:

$$H_{CNB} \equiv \int d\Phi[\nu] = H_C - \int d\Phi \oint \sigma dS$$

Which can also be written in a more familiar form in terms of topological velocity field as:

$$H_{CNB} = \int \vec{B} \cdot \vec{v}_t d^3x$$

$$\vec{v}_t = \vec{v} - \sigma \vec{\nabla} S$$

A local topological constant also exists:

$$[\nu] = \frac{dH_{CNB}}{d\Phi} = \frac{dH_C}{d\Phi} + \oint S d\sigma$$

The line integral is along the magnetic field line.

Question: Why should we care about topological constants (local or global)?

Answer: This may effect the stability of MHD flows.

A Bicycle

Null Angular Momentum = Instability

Non Zero Angular Momentum= Stability

Controlled Fusion

Tokomak vs. Stellarator

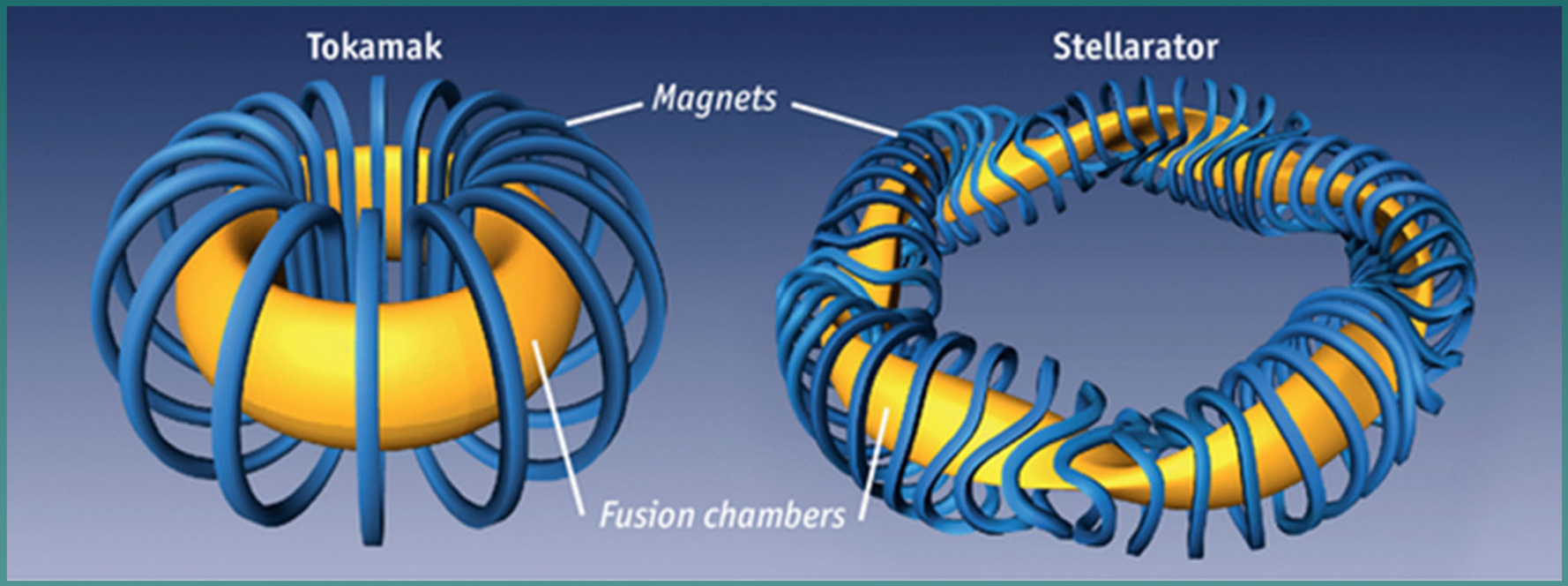
Tokamak
Stellarator
Magnets
Fusion chambers

How does the new cross helicity effect stability?

Obviously:

$$0 \le \left(\vec{B} - \vec{v}_t\right)^2 = \vec{B}^2 + \vec{v}_t^{\,2} - 2\vec{v}_t \cdot \vec{B} \Rightarrow$$

$$\vec{v}_t \cdot \vec{B} \le \frac{1}{2}\left(\vec{B}^2 + \vec{v}_t^{\,2}\right)$$

Hence:

$$H_{CNB} = \int \vec{B} \cdot \vec{v_t} d^3x \leq \frac{1}{2} \int \left(\vec{B}^2 + \vec{v_t}^2 \right) d^3x$$

- **A non barotropic MHD flow with non zero non barotropic cross Helicity has a non zero lower bound on the "energy" of the flow.**
- **This bound is due to the non trivial topology of the flow.**
- **Since the non barotropic cross Helicity is a dynamical constant the "energy" is bounded no matter what the dynamics are and thus certain instabilities are prohibited for a flow with non trivial topology.**

However, now we have a stronger constraint:

Consider a magnetic flux tube of a cross section S in which the magnetic field is almost constant in this tube:

$$H_{CNB} = \int d^3x \vec{B} \cdot \vec{v}_t \simeq [\nu] B \Delta S$$

Hence in this flux tube we deduce the lower bound:

$$[\nu]B\Delta S \leq \frac{1}{2}\int d^3x\left(\vec{v}_t^2 + \vec{B}^2\right)$$

$$\mathrm{d}^3\mathrm{x} = \Delta S dl$$

In which dl is a line element along the flux tube. We obtain the local bound for the discontinuity of nu:

$$[\nu] \leq \frac{1}{2B}\int dl\left(\vec{v}_t^2 + \vec{B}^2\right)$$

This is a much more stringent stability condition!

$$[\nu] \leq \frac{1}{2B} \int dl \left(\vec{v}_t^2 + \vec{B}^2 \right)$$

- This is so because the constraint is local (and of course any flow satisfying the local condition also satisfies the global one).

Topological Constraints & Fusion

- To achieve fusion one needs to achieve a stable plasma which has the needed temperature and density to sustain fusion.
- Usually this is difficult to achieve for long enough durations in earth conditions (but not in the sun).
- A flow with non-trivial nu discontinuities seems to be more stable as the energy of the flow is bounded from below.

Fast and Slow Processes

- So far we have discussed only ideal MHD which does not describe a true plasma since it neglects among other things viscosity and finite conductivity.
- Non ideal MHD do not conserve topology due to the phenomena of line reconnection.
- Nevertheless, the most fast processes and most dangerous instabilities are due to the (ideal) dynamical processes.

Boozer A. H., ”Physics of magnetically confined plasmas” Rev. Mod. Phys., Vol 76, 1071, 2004.

- ”A spiky current profile causes a rapid dissipation of energy relative to magnetic helicity. If the evolution of a magnetic field is rapid, then it must be at constant helicity.”
- Taylor's conjecture.
- This will be true also for the cross Helicity per unit flux (discontinuity of nu)?

Lagrangian Variational Principles & Topological Constants of Motion

Sakurai's Idea

T. Sakurai, Pub. Ast. Soc. Japan **31** 209 (1979)

Let us represent the magnetic field lines as intersection of two co-moving surfaces χ and η. (Euler potentials)

This is essentially introducing a coordinate system connected to the magnetic field lines. The third coordinate parameterizes the distance along the magnetic field lines and was denoted "Magnetic Metage" μ by Yahalom & Lynden-Bell (2008).

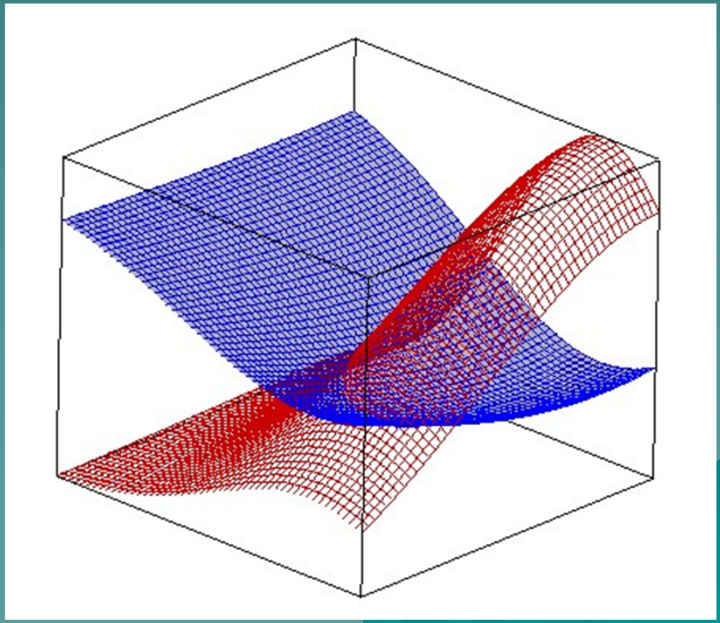

Magnetic Load and Metage

Consider a thin tube surrounding a magnetic field line.

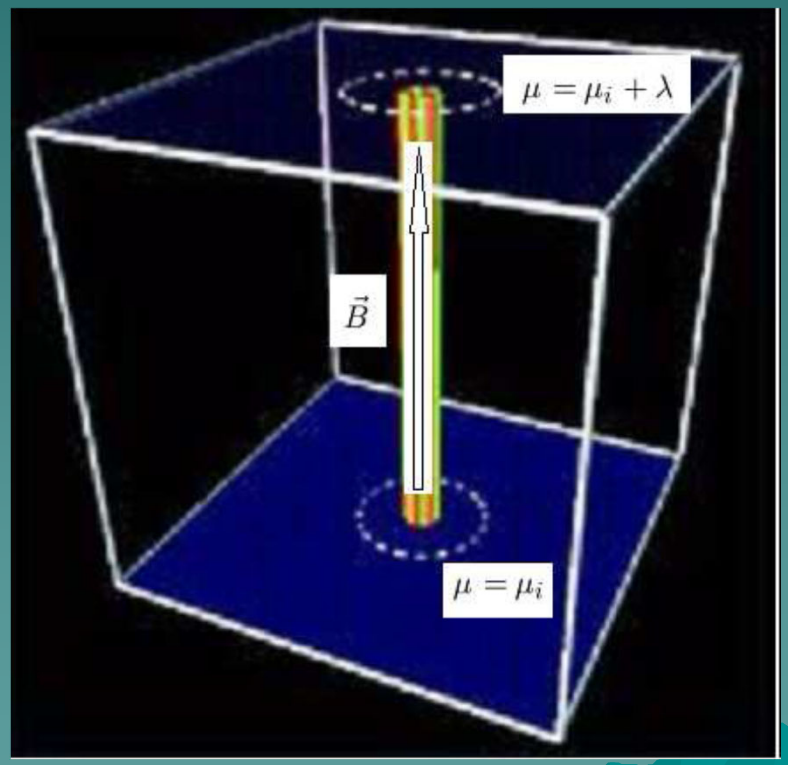

An analogous treatment for non-magnetic fluid dynamics given by:

LYNDEN-BELL, D. & KATZ, J. 1981 *Proc. R. Soc. Lond.* A **378**, 179.

Load

Two conserved quantities:

$$\Delta\Phi = \int \vec{B} \cdot d\vec{S}$$

$$\Delta M = \int \rho d\vec{l} \cdot d\vec{S},$$

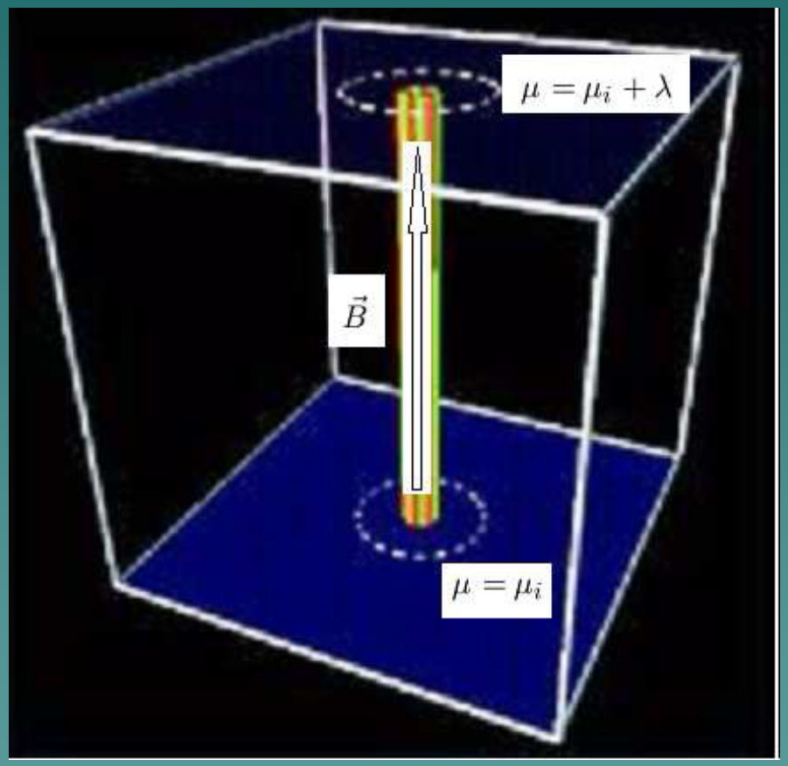

The load is the relation of the two quantities:

$$\lambda = \frac{\Delta M}{\Delta\Phi} = \oint \frac{\rho}{B} dl$$

Obviously the load is conserved:

$$\frac{d\lambda}{dt} = 0$$

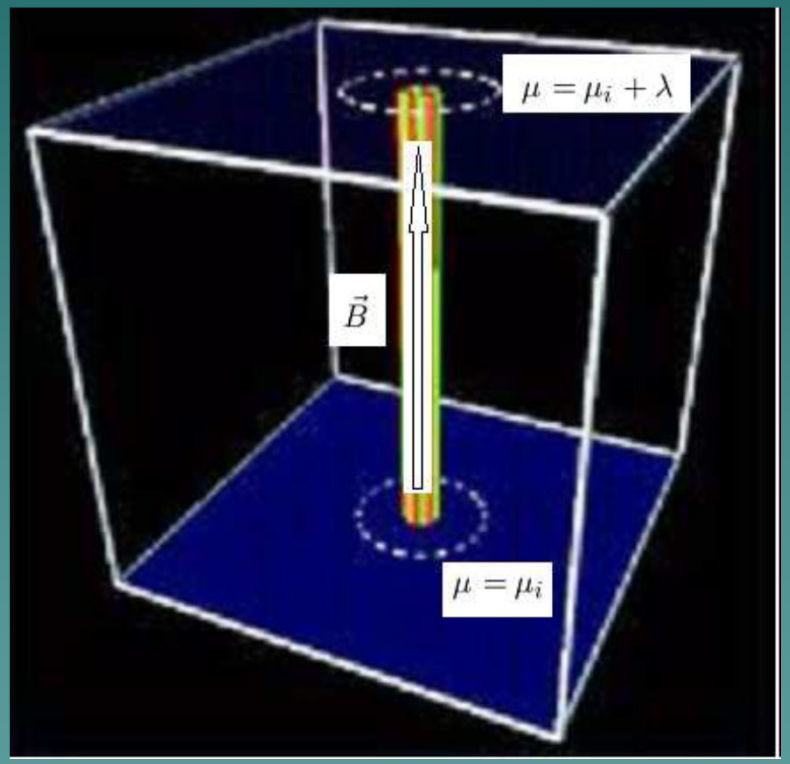

Metage

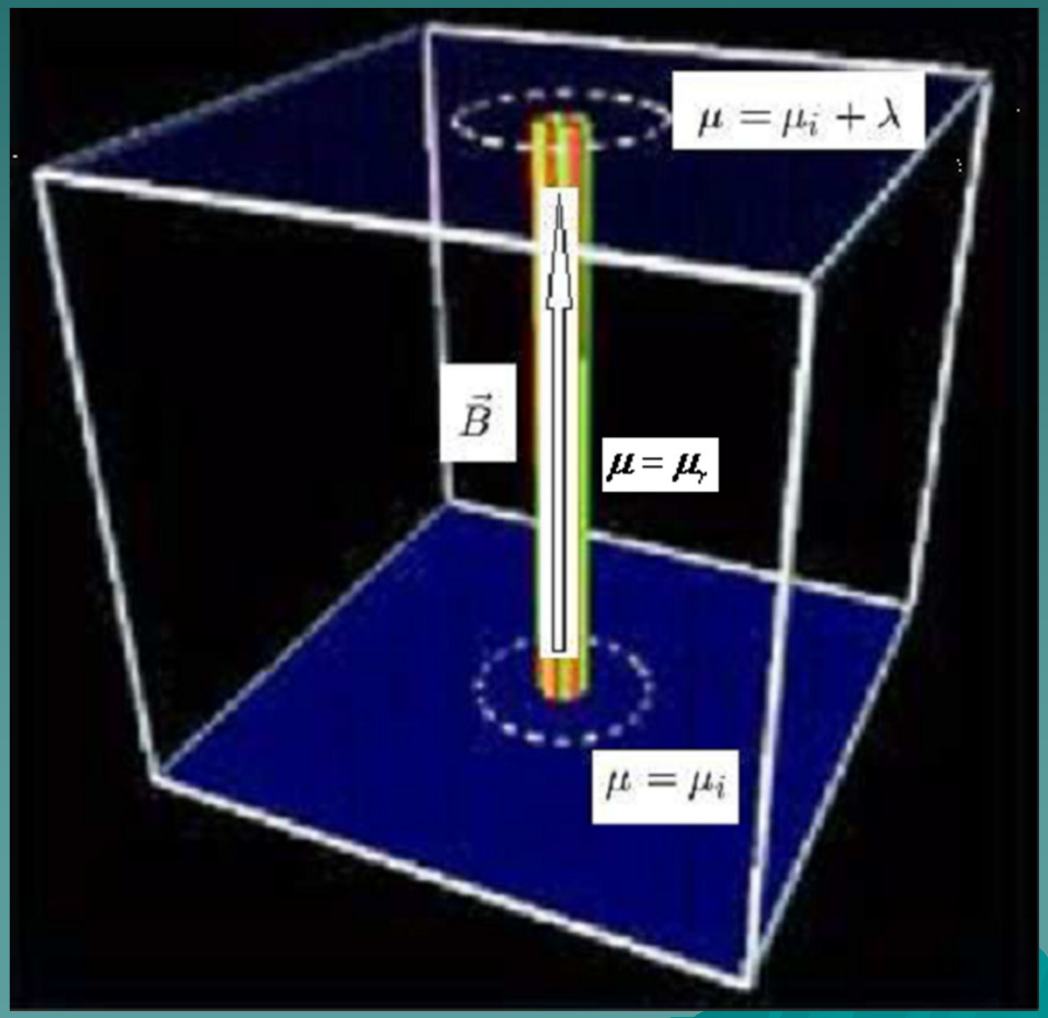

Metage

Consider an arbitrary comoving point on the magnetic field line and denote it by i, and consider an additional comoving point on the magnetic field line and denote it by r, the quantity:

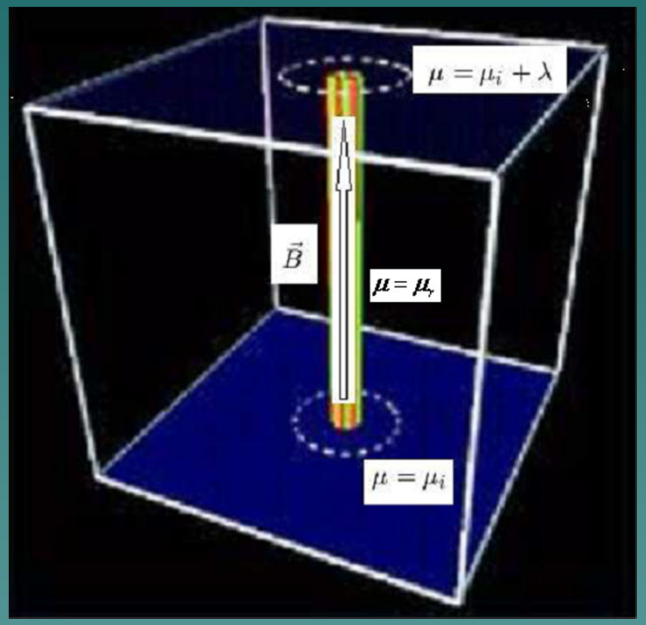

$$\mu(r) = \int_i^r \frac{\rho}{B} dl + \mu(i)$$

Is also conserved and is denoted Metage.

$$\mu(r) = \int_i^r \frac{\rho}{B} dl + \mu(i)$$

$$\frac{d\mu}{dt} = 0.$$

$$\vec{\nabla}\mu \cdot \vec{B} = \rho.$$

$$\rho = \nabla\mu \cdot \boldsymbol{B} = \nabla\mu \cdot (\nabla\chi \times \nabla\eta) = \frac{\partial(\chi, \eta, \mu)}{\partial(x, y, z)}$$

The Variational Principle for Barotropic Flows

STURROCK, P. A. 1994 *Plasma Physics*. Cambridge University Press.

(And references there in)

$$\left.\begin{aligned} A &\equiv \int \mathscr{L}\, \mathrm{d}^3x\, \mathrm{d}t, \\ \mathscr{L} &\equiv \rho\left(\tfrac{1}{2}\boldsymbol{v}^2 - \varepsilon(\rho)\right) - \frac{\boldsymbol{B}^2}{8\pi}, \end{aligned}\right\}$$

$\varepsilon(\rho)$ is the specific internal energy.

The Variational Derivative

$$\delta A = \int \delta \mathscr{L} \, \mathrm{d}^3 x \, \mathrm{d}t,$$

$$\delta \mathscr{L} = \delta\rho\left(\tfrac{1}{2}\boldsymbol{v}^2 - w(\rho)\right) + \rho \boldsymbol{v} \cdot \delta \boldsymbol{v} - \frac{\boldsymbol{B} \cdot \delta \boldsymbol{B}}{4\pi}$$

$w = \partial(\varepsilon\rho)/\partial\rho$ is the specific enthalpy

Only variations that conserve mass and magnetic flux are allowed:

$$\delta\rho = -\nabla\cdot(\rho\xi)$$

$$\delta \boldsymbol{B} = \nabla\times(\xi\times\boldsymbol{B})$$

However, this hold automatically if one uses Sakurai representation for the magnetic field and the density Jacobian representation including the Metage.

The Variational Derivative

$$\delta A = \int \mathrm{d}^3x \rho \boldsymbol{v} \cdot \boldsymbol{\xi} \Big|_{t_0}^{t_1}$$

$$+ \int \mathrm{d}t \left\{ \oint \mathrm{d}\boldsymbol{S} \cdot \left[-\rho \boldsymbol{\xi} \left(\tfrac{1}{2}\boldsymbol{v}^2 - w(\rho) \right) + \rho \boldsymbol{v}(\boldsymbol{v} \cdot \boldsymbol{\xi}) + \frac{1}{4\pi} \boldsymbol{B} \times (\boldsymbol{\xi} \times \boldsymbol{B}) \right] \right.$$

$$\left. + \int \mathrm{d}^3x \boldsymbol{\xi} \cdot \left[-\rho \boldsymbol{\nabla} w - \rho \frac{\partial \boldsymbol{v}}{\partial t} - \rho (\boldsymbol{v} \cdot \boldsymbol{\nabla}) \boldsymbol{v} - \frac{1}{4\pi} \boldsymbol{B} \times (\boldsymbol{\nabla} \times \boldsymbol{B}) \right] \right\},$$

Assuming: $\frac{\partial \rho}{\partial t} + \vec{\nabla} \cdot (\rho \vec{v}) = 0$

One obtains the Euler equations and boundary conditions.

Noether's Theorem

Amalie Emmy Noether (23 March 1882 – 14 April 1935) German (Jewish) mathematician.

Described by Hilbert, Einstein as the most important woman in the history of mathematics.

<u>Every Continuous Symmetry group generates conserved currents.</u>

What is the continuous symmetry group which generates cross helicity?

Arnold's (1966) Symmetry Group or Relabelling

$(\alpha^1, \alpha^2, \alpha^3)$ $(\alpha^1, \alpha^2, \alpha^3)$

The labels are not changed due to the flow!

Mass Conservation

$$\rho(x^k)\mathrm{d}^3x = \rho\left(x_0^k\right)\mathrm{d}^3x_0 = \rho\left(x_0^k\right)\frac{\partial\left(x_0^1, x_0^2, x_0^3\right)}{\partial(\alpha^1, \alpha^2, \alpha^3)}\mathrm{d}^3\alpha.$$

A choice of appropriate continuous labels at t=0 assures by mass conservation:

$$\rho(x^k)\,\mathrm{d}^3x = \mathrm{d}^3\alpha, \qquad \rho = \frac{\partial(\alpha^1, \alpha^2, \alpha^3)}{\partial(x^1, x^2, x^3)}$$

In fact our own magnetic line labeling has this property:

$$\rho = \nabla\mu \cdot \boldsymbol{B} = \nabla\mu \cdot (\nabla\chi \times \nabla\eta) = \frac{\partial(\chi, \eta, \mu)}{\partial(x, y, z)}$$

Arnold's Symmetry Group or Relabelling

The choice of alpha's is not unique:

$$\frac{\partial(\tilde{\alpha}^1, \tilde{\alpha}^2, \tilde{\alpha}^3)}{\partial(\alpha^1, \alpha^2, \alpha^3)} = 1.$$

To apply Noether theorem we need to look at small symmetry transformations:

$$\tilde{\alpha}^i = \alpha^i + \delta\alpha^i$$

Volume and Surface Conditions:

$$\frac{\partial \delta \alpha_k}{\partial \alpha_k} = 0, \qquad \delta \boldsymbol{\alpha} \cdot \boldsymbol{n}|_{surface} = 0,$$

Where n is a unit vector orthogonal to the surface of the alpha-space volume which we integrate over.

The surface restriction is only needed when the infinitesimal transformation changes the domain of integration in such a way as to modify L.

Consider the subgroup of alpha translations:

$$\delta\alpha_k = a_k, \qquad a_k = const$$

This subgroup satisfy trivially the volume condition but of course does not satisfy *the surface condition* unless at least few of the *a* are cyclic.

Take the following subgroup:

$$\delta\chi = 0,\ \delta\eta = 0, \delta\mu = const,$$

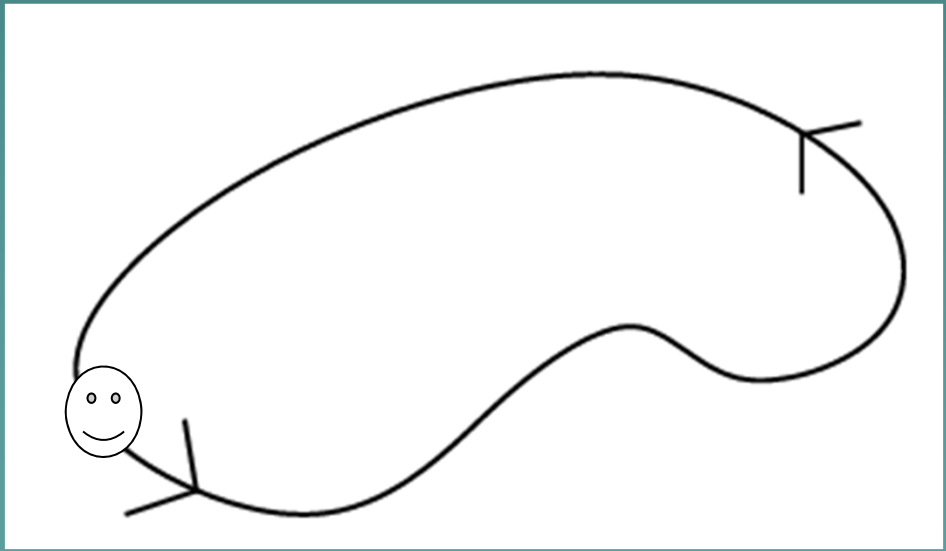

Metage was only defined up to a constant anyway!

$$\mu(r) = \int_i^r \frac{\rho}{B} dl + \mu(i)$$

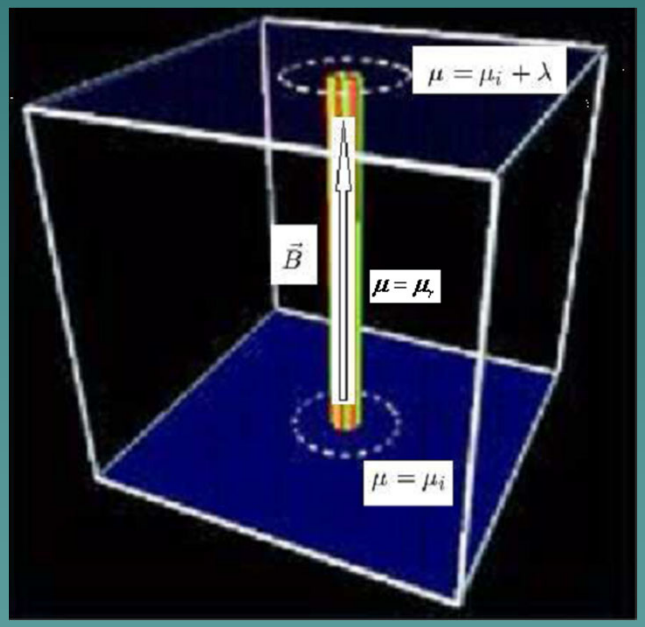

The corresponding displacement of the subgroup:

$$\delta\chi = 0,\ \delta\eta = 0, \delta\mu = const,$$

$$\boldsymbol{\xi} = -\frac{\partial \boldsymbol{r}}{\partial \mu}\delta\mu = -\delta\mu\frac{\boldsymbol{B}}{\rho}$$

Noether Theorem for MHD

$$\delta A = \int \mathrm{d}^3x \rho \boldsymbol{v}\cdot\boldsymbol{\xi}\Big|_{t_0}^{t_1}$$

$$+ \int \mathrm{d}t \left\{ \oint \mathrm{d}\boldsymbol{S}\cdot\left[-\rho\boldsymbol{\xi}\left(\tfrac{1}{2}\boldsymbol{v}^2 - w(\rho)\right) + \rho\boldsymbol{v}(\boldsymbol{v}\cdot\boldsymbol{\xi}) + \frac{1}{4\pi}\boldsymbol{B}\times(\boldsymbol{\xi}\times\boldsymbol{B})\right]\right.$$

$$\left. + \int \mathrm{d}^3x \boldsymbol{\xi}\cdot\left[-\rho\nabla w - \rho\frac{\partial\boldsymbol{v}}{\partial t} - \rho(\boldsymbol{v}\cdot\nabla)\boldsymbol{v} - \frac{1}{4\pi}\boldsymbol{B}\times(\nabla\times\boldsymbol{B})\right]\right\},$$

Provided that Euler equations and boundary conditions hold. And the transformation is a symmetry transformation $\delta A=0$:

$$\int d^3x \rho \boldsymbol{v} \cdot \boldsymbol{\xi} \Big|_{t_0}^{t_1}$$

is null.

$$\int d^3x \, \rho \, \vec{\mathrm{v}} \cdot \vec{\xi} = \text{constant}$$

Lo and behold!

$$\int d^3x\, \rho\, \vec{\mathrm{v}} \cdot \vec{\xi} = \text{constant}$$

$$\boldsymbol{\xi} = -\frac{\partial \boldsymbol{r}}{\partial \mu}\delta\mu = -\delta\mu\frac{\boldsymbol{B}}{\rho}$$

$$\int d^3x\, \vec{\mathrm{v}} \cdot \vec{B} = \text{constant}$$

The non magnetic helical case:

MOREAU, J. J. 1977 *Seminaire D'analyse Convexe, Montpellier* Expose no: 7.

YAHALOM, A. 1995 *J. Math. Phys.* **36**, 1324.

Intermediate Account

1. **We have succeeded in finding the symmetry group associated with cross helicity.**
2. **This group has a particular simple representation in terms of the variables introduced.**
3. **What about non barotropic flows?**

Cross Helicity is not Conserved

$$\frac{dH_C}{dt} = \int T \boldsymbol{\nabla} s \cdot \mathbf{B} d^3x,$$

What is conserved?

The Variational Principle

$$A \equiv \int \mathcal{L} d^3x dt,$$

$$\mathcal{L} \equiv \rho(\frac{1}{2}\mathbf{v}^2 - \varepsilon(\rho, s)) - \frac{\mathbf{B}^2}{8\pi} - \rho\sigma\frac{ds}{dt},$$

Conservation of Entropy is enforced by a Lagrange multiplier

The Variation

$$\delta_{\boldsymbol{\xi}} A = \int d^3x \rho(\mathbf{v} - \sigma \boldsymbol{\nabla} s) \cdot \boldsymbol{\xi}|_{t_0}^{t_1}$$
$$+ \int dt \{ \oint d\mathbf{S} \cdot [-\rho \boldsymbol{\xi} (\frac{1}{2}\mathbf{v}^2 - w(\rho, s)) + \rho \mathbf{v}((\mathbf{v} - \sigma \boldsymbol{\nabla} s) \cdot \boldsymbol{\xi}) + \frac{1}{4\pi}\mathbf{B} \times (\boldsymbol{\xi} \times \mathbf{B})]$$
$$+ \int d^3x \boldsymbol{\xi} \cdot [-\boldsymbol{\nabla} P - \rho \frac{\partial \mathbf{v}}{\partial t} - \rho(\mathbf{v} \cdot \boldsymbol{\nabla})\mathbf{v} - \frac{1}{4\pi}\mathbf{B} \times (\boldsymbol{\nabla} \times \mathbf{B})]\},$$

The Noether Current

$$\delta J = \int d^3x \rho(\mathbf{v} - \sigma \boldsymbol{\nabla} s) \cdot \boldsymbol{\xi}$$

Symmetry Group

$$\tilde{\chi} = \chi, \tilde{\eta} = \eta, \tilde{\mu} = \mu + a(\chi, \eta)$$

$$\boldsymbol{\xi} = -\frac{\partial \mathbf{r}}{\partial \mu}\delta\mu = -\delta\mu\frac{\mathbf{B}}{\rho}.$$

The Noether Current for Metage Translations

$$\delta J = \int d^3x \rho(\mathbf{v} - \sigma \boldsymbol{\nabla} s) \cdot \boldsymbol{\xi} = -\int d^3x \delta\mu(\mathbf{v} - \sigma \boldsymbol{\nabla} s) \cdot \mathbf{B}$$

The case of uniform translations along all magnetic field lines

$$\delta J = -\delta\mu \int d^3x (\mathbf{v} - \sigma \boldsymbol{\nabla} s) \cdot \mathbf{B} = -\delta\mu H_{CNB}$$

Non barotropic cross helicity:

$$H_{CNB} \equiv \int d^3x (\mathbf{v} - \sigma \boldsymbol{\nabla} s) \cdot \mathbf{B} = \int d^3x \mathbf{v}_t \cdot \mathbf{B}$$

Topological velocity:

$$\mathbf{v}_t \equiv \mathbf{v} - \sigma \boldsymbol{\nabla} s$$

The case of non uniform translations along magnetic field lines

$$\delta J = -\int d^3x \delta\mu \mathbf{v}_t \cdot \mathbf{B} = -\int d\chi d\eta \delta\mu \oint_{\chi,\eta} d\mu \rho^{-1} \mathbf{v}_t \cdot \mathbf{B}$$

Non barotropic cross helicity:

$$I = \oint_{\chi,\eta} d\mu \rho^{-1} \mathbf{v}_t \cdot \mathbf{B}$$

Along a magnetic field line:

$$d\mu = \nabla\mu \cdot d\mathbf{r} = \nabla\mu \cdot \hat{B} dr = \frac{\rho}{B} dr$$

Circulation Conservation of the topological velocity along the magnetic field lines

$$I = \oint_{\chi,\eta} dr \mathbf{v}_t \cdot \hat{B} = \oint_{\chi,\eta} d\mathbf{r} \cdot \mathbf{v}_t.$$

Connection to Previous Works

A. Yahalom "Simplified Variational Principles for non Barotropic Magnetohydrodynamics". (arXiv: 1510.00637 [Plasma Physics]) J. Plasma Phys. (2016), vol. 82, 905820204 doi:10.1017/S0022377816000222.

Generalized Clebsch form:

$$\mathbf{v} = \boldsymbol{\nabla}\nu + \alpha\boldsymbol{\nabla}\chi + \beta\boldsymbol{\nabla}\eta + \sigma\boldsymbol{\nabla}s.$$

$$\mathbf{v}_t = \boldsymbol{\nabla}\nu + \alpha\boldsymbol{\nabla}\chi + \beta\boldsymbol{\nabla}\eta$$

$$I = \oint_{\chi,\eta} d\mathbf{r} \cdot \mathbf{v}_t = \oint_{\chi,\eta} d\mathbf{r} \cdot \boldsymbol{\nabla}\nu = [\nu].$$

Thus I is a non barotropic cross helicity per unit of magnetic flux

$$I = [\nu] = \frac{dH_{CNB}}{d\Phi}.$$

More Topological Conservation Laws?

Remember the Conditions:

$$\frac{\partial \delta\alpha_k}{\partial \alpha_k} = 0, \qquad \delta\boldsymbol{\alpha}\cdot\boldsymbol{n}|_{surface} = 0,$$

Consider the symmetry subgroup:

$$\tilde{\eta} = \eta + \delta\eta(\chi,\eta), \qquad \tilde{\chi} = \chi + \delta\chi(\chi,\eta), \qquad \tilde{\mu} = \mu$$

This leads to the equation:

$$\partial_\eta \delta\eta + \partial_\chi \delta\chi = 0.$$

With the general solution:

$$\delta\eta = \partial_\chi \delta f, \qquad \delta\chi = -\partial_\eta \delta f,$$

This is equivalent to a particle displacement:

$$\vec{\xi} = -\frac{\partial \vec{r}}{\partial \chi}\delta\chi - \frac{\partial \vec{r}}{\partial \eta}\delta\eta =$$

$$-\frac{1}{\rho}\left(\vec{\nabla}\eta \times \vec{\nabla}\mu\ \delta\chi + \vec{\nabla}\mu \times \vec{\nabla}\chi\ \delta\eta\right) =$$

$$\frac{\vec{\nabla}\mu}{\rho} \times (\vec{\nabla}\eta\delta\chi - \vec{\nabla}\chi\delta\eta)$$

Let us consider <u>constant</u> chi and mu variations (translations), obviously they satisfy the equation:

$$\partial_\eta \delta\eta + \partial_\chi \delta\chi = 0.$$

This will lead to two conserved currents:

$$\delta J_\chi = \delta\chi \int d^3x \vec{v}_t \cdot \vec{\nabla}\mu \times \vec{\nabla}\eta = \delta\chi \; H_{CNB\chi},$$

$$\delta J_\eta = \delta\eta \int d^3x \vec{v}_t \cdot \vec{\nabla}\chi \times \vec{\nabla}\mu = \delta\eta \; H_{CNB\eta}.$$

Which in turn lead to two new conserved helicities:

$$H_{CNB\chi} \equiv \int d^3x \vec{v}_t \cdot \vec{\nabla}\mu \times \vec{\nabla}\eta,$$

$$H_{CNB\eta} \equiv \int d^3x \vec{v}_t \cdot \vec{\nabla}\chi \times \vec{\nabla}\mu$$

Each suffer a topological interpretation (knotted field lines) but with a different vector field.

Caveat:
Boundary conditions must be respected

$$\oint d\vec{S}\cdot\left[-\rho\vec{\xi}(\frac{1}{2}\vec{v}^2-w(\rho,s))+\rho\vec{v}(\vec{v}_t\cdot\vec{\xi})+\frac{1}{4\pi}\vec{B}\times(\vec{\xi}\times\vec{B})\right]=0$$

For either (or both):

$$\vec{\xi}_\chi=\frac{1}{\rho}\left(\vec{\nabla}\mu\times\vec{\nabla}\eta\right)\delta\chi,\qquad \vec{\xi}_\eta=\frac{1}{\rho}\left(\vec{\nabla}\chi\times\vec{\nabla}\mu\right)\delta\eta$$

Intermediate Account

1. We have succeeded in finding the symmetry group associated with cross helicity and non barotropic cross helicity.
2. We have succeeded in finding a local version of non barotropic cross helicity using symmetry considerations.
3. This group has a particular simple representation in terms of metage translations (uniform and non uniform across magnetic field lines).
4. But are those variables useful also for deriving a better variational principle? The answer is yes.

The Stationary Variational Principle

Entropy

- **Obviously a three-dimensional flow allows only three labels.**
- **However, the entropy in an ideal flow is a fourth label.**
- **We distinguish two cases:**
  1. **Magnetic field lines lie on entropy surfaces. In this case the Metage is independent of the entropy.**
  2. **Magnetic field lines do not lie on entropy surfaces. In this case the Metage can be made a function of the entropy alone.**

$$\rho = \frac{\partial \mu}{\partial s} \frac{\partial(\chi, \eta, s)}{\partial(x, y, z)}.$$

Representation

How can we represent the physical quantities:

$$\vec{B}, \vec{V}, \rho$$

In terms of the three functions: $\chi, \mu, \eta ?$

For the magnetic field and density the answer is known:

$$\vec{B} = \vec{\nabla}\chi \times \vec{\nabla}\eta$$

$$\rho = \vec{\nabla}\mu \cdot \vec{B} = \vec{\nabla}\mu \cdot (\vec{\nabla}\chi \times \vec{\nabla}\eta) = \frac{\partial(\chi, \eta, \mu)}{\partial(x, y, z)}$$

The Velocity of a Stationary Flow

$$\cancel{\frac{\partial \rho}{\partial t}} + \vec{\nabla} \cdot (\rho \vec{v}) = 0$$

$$\cancel{\frac{\partial \vec{B}}{\partial t}} = \vec{\nabla} \times (\vec{v} \times \vec{B}) \quad \rightarrow \quad \vec{\nabla} \times (\vec{v} \times \vec{B}) = 0$$

$$\frac{d\chi}{dt} = 0 \quad \rightarrow \quad \vec{v} \cdot \vec{\nabla}\chi = 0$$

Solution

After some calculations we obtain the simple result:

$$\vec{v} = \frac{\vec{\nabla}\mu \times \vec{\nabla}\chi}{\rho}$$

Euler's Equations for Stationary Flow

At this stage all the relevant equations are solved except Euler's equations of stationary flow:

$$\rho\frac{d\vec{v}}{dt} = \rho(\cancel{\frac{\partial\vec{v}}{\partial t}} + (\vec{v}\cdot\vec{\nabla})\vec{v}) = -\vec{\nabla}p + \frac{(\vec{\nabla}\times\vec{B})\times\vec{B}}{4\pi}$$

The solution will be derived from a Variational Principle.

The Variational Principle

$$A \equiv \int \mathcal{L} d^3x dt$$

Is the Action

$$\mathcal{L}$$

Is the Lagrangian density

$$\mathcal{L} \equiv \rho(\frac{1}{2}\mathbf{v}^2 - \varepsilon(\rho, s)) - \frac{\mathbf{B}^2}{8\pi}$$

The Lagrangian density contains the Kinetic Energy term and two potential energy terms, one is due to the internal energy (pressure) and the other is due to magnetic fields.

The Variational Principle in Terms of the New Variables

$$\mathcal{L}[\chi,\eta,\mu] = \rho\left(\frac{1}{2}\left(\frac{\nabla\mu\times\nabla\chi}{\rho}\right)^2 - \varepsilon(\rho, s(\chi,\eta,\mu))\right) - \frac{(\nabla\chi\times\nabla\eta)^2}{8\pi}$$

Calculating the variational derivative will lead to Euler's equations of stationary flow.

$$\delta\alpha_i = -\boldsymbol{\nabla}\alpha_i \cdot \boldsymbol{\xi}.$$

$$\delta s = \frac{\partial s}{\partial \alpha_i}\delta\alpha_i = -\frac{\partial s}{\partial \alpha_i}\boldsymbol{\nabla}\alpha_i \cdot \boldsymbol{\xi} = -\boldsymbol{\nabla} s \cdot \boldsymbol{\xi}.$$

$$\delta\rho = -\boldsymbol{\nabla} \cdot (\rho\boldsymbol{\xi}).$$

$$\delta B = \boldsymbol{\nabla} \times (\boldsymbol{\xi} \times B).$$

$$\delta \boldsymbol{v} = -\frac{\delta\rho}{\rho}\boldsymbol{v} + \frac{1}{\rho}\boldsymbol{\nabla} \times (\rho\boldsymbol{\xi} \times \boldsymbol{v}).$$

$$\delta A = \int \delta \mathcal{L} d^3x dt,$$

$$\delta \mathcal{L} = \delta\rho(\frac{1}{2}\boldsymbol{v}^2 - w(\rho, s)) - \rho T \delta s + \rho \boldsymbol{v} \cdot \delta \boldsymbol{v} - \frac{\boldsymbol{B} \cdot \delta \boldsymbol{B}}{4\pi},$$

$$\begin{aligned}\delta \mathcal{L} &= \boldsymbol{v} \cdot \boldsymbol{\nabla} \times (\rho \boldsymbol{\xi} \times \boldsymbol{v}) - \frac{\boldsymbol{B} \cdot \boldsymbol{\nabla} \times (\boldsymbol{\xi} \times \boldsymbol{B})}{4\pi} - \delta\rho(\frac{1}{2}\boldsymbol{v}^2 + w) + \rho T \boldsymbol{\nabla} s \cdot \boldsymbol{\xi} \\ &= \boldsymbol{v} \cdot \boldsymbol{\nabla} \times (\rho \boldsymbol{\xi} \times \boldsymbol{v}) - \frac{\boldsymbol{B} \cdot \boldsymbol{\nabla} \times (\boldsymbol{\xi} \times \boldsymbol{B})}{4\pi} + \boldsymbol{\nabla} \cdot (\rho \boldsymbol{\xi})(\frac{1}{2}\boldsymbol{v}^2 + w) \\ &+ \rho T \boldsymbol{\nabla} s \cdot \boldsymbol{\xi}.\end{aligned}$$

$$\delta A = \int dt\{\oint d\boldsymbol{S}\cdot[\rho(\boldsymbol{\xi}\times\boldsymbol{v})\times\boldsymbol{v} - \frac{(\boldsymbol{\xi}\times\boldsymbol{B})\times\boldsymbol{B}}{4\pi} + (\frac{1}{2}\boldsymbol{v}^2 + w)\rho\boldsymbol{\xi}]$$
$$+ \int d^3x\boldsymbol{\xi}\cdot[\rho\boldsymbol{v}\times\boldsymbol{\omega} + \boldsymbol{J}\times\boldsymbol{B} - \rho\boldsymbol{\nabla}(\frac{1}{2}\boldsymbol{v}^2 + w) + \rho T\boldsymbol{\nabla}s]\}.$$

$$\boldsymbol{\omega} = \boldsymbol{\nabla}\times\boldsymbol{v}$$

$$\rho\boldsymbol{v}\times\boldsymbol{\omega} + \boldsymbol{J}\times\boldsymbol{B} - \rho\boldsymbol{\nabla}(\frac{1}{2}\boldsymbol{v}^2 + w) + \rho T\boldsymbol{\nabla}s = 0.$$

$$\frac{1}{2}\nabla(v^2) = (v \cdot \nabla)v + v \times (\nabla \times v)$$

$$\rho(v \cdot \nabla)v = -\nabla p + J \times B.$$

Conclusion

1. We have managed to reduce the stationary non-barotroic magneto-hydrodynamic equations from 8 equations containing 7 quantities to 3 equations with 3 variables.
2. Further more we have managed to represent stationary magnetohydrodynamics as a Variational Problem in terms of those 3 variables.

Examples

Non Single Valued Variational Variables

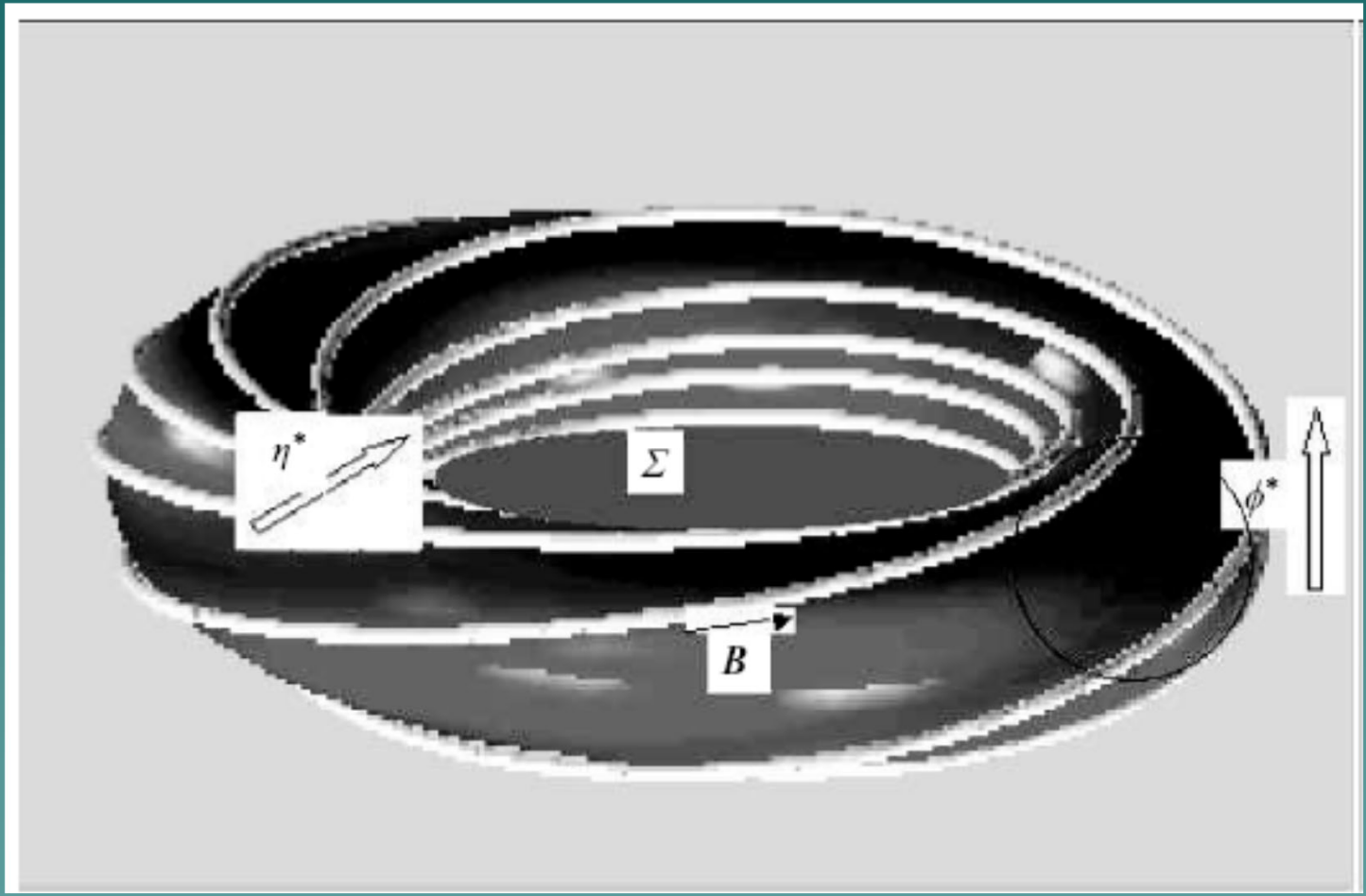
η^*
Σ
ϕ^*
B

Let us define the variable r:

$$r = \sqrt{z^2 + (R-1)^2}$$

$\Psi = \Psi(r)$. In this case surfaces of constant Ψ are nested tori.

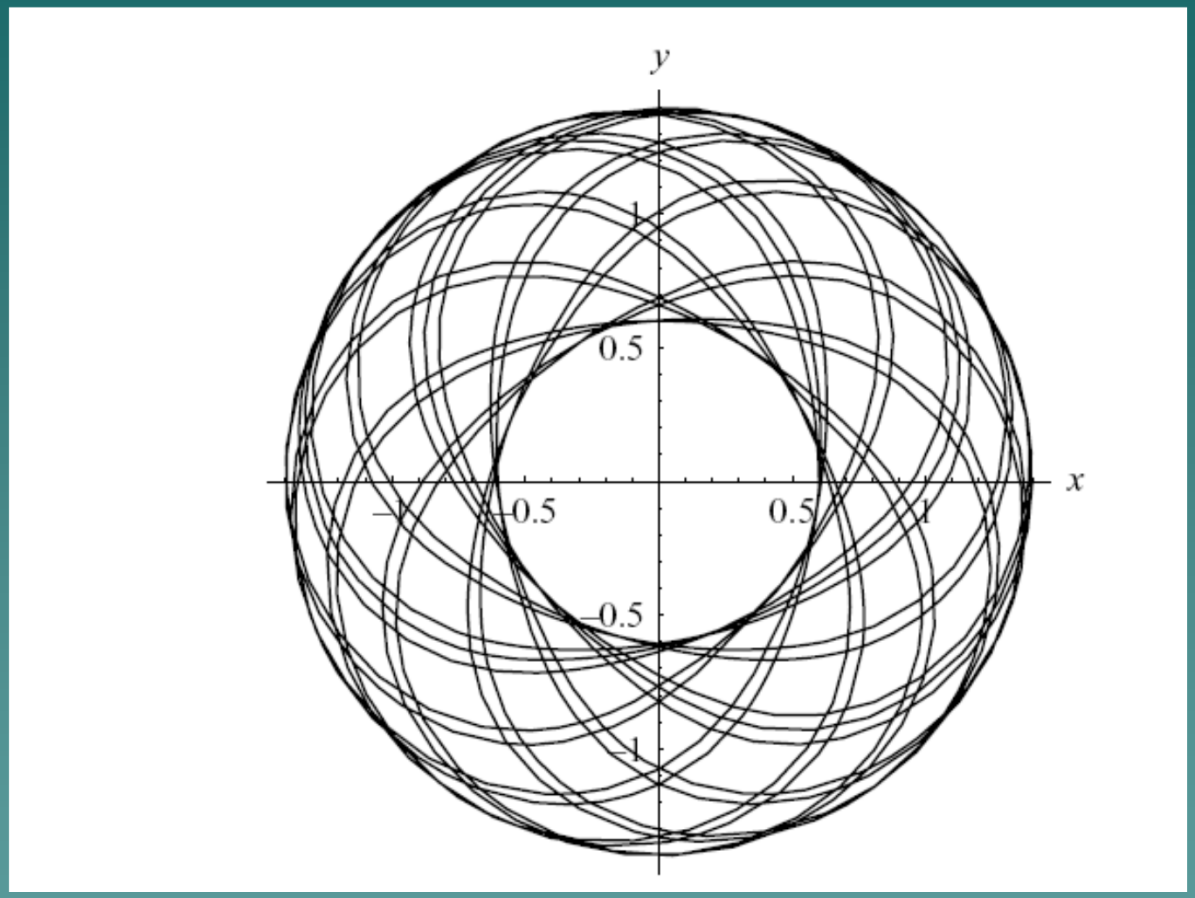

A numerically integrated field line assuming that $\Psi = r + r^3$, $\alpha = 1$ and starting from the point $R = 0.6$, $\phi = 0$, $z = 0$. The plot shows twenty rotations.

$$\chi = \frac{1}{2\pi}\int \boldsymbol{B}\cdot \mathrm{d}\boldsymbol{S} = \frac{1}{2\pi}\oint \boldsymbol{A}\cdot \mathrm{d}l = \frac{1}{2\pi}\int_0^{2\pi} A_\phi R\,\mathrm{d}\phi = A_\phi R = \alpha\Psi.$$

$$\eta = \phi + C(z, R)$$

$$C = \frac{1}{\alpha}\left[\frac{r\Psi''}{\Psi'} I(r,\eta^*) + II(r,\eta^*)\right]$$

$$I(r,\eta^*) \equiv \int \frac{\mathrm{d}\eta^*}{1 + r\cos\eta^*} = \frac{2}{\sqrt{1-r^2}}\left[\arctan\left(\sqrt{\frac{1-r}{1+r}}\tan\left(\frac{\eta^*}{2}\right)\right) + \begin{cases} 0, & 0 \leqslant \eta^* < \pi \\ \pi, & \pi \leqslant \eta^* < 2\pi. \end{cases}\right]$$

$$II(r,\eta^*) \equiv \int \frac{\mathrm{d}\eta^*}{(1 + r\cos\eta^*)^2} = \frac{I(r,\eta^*)}{1-r^2} - \frac{r\sin\eta^*}{(1-r^2)(1 + r\cos\eta^*)}$$

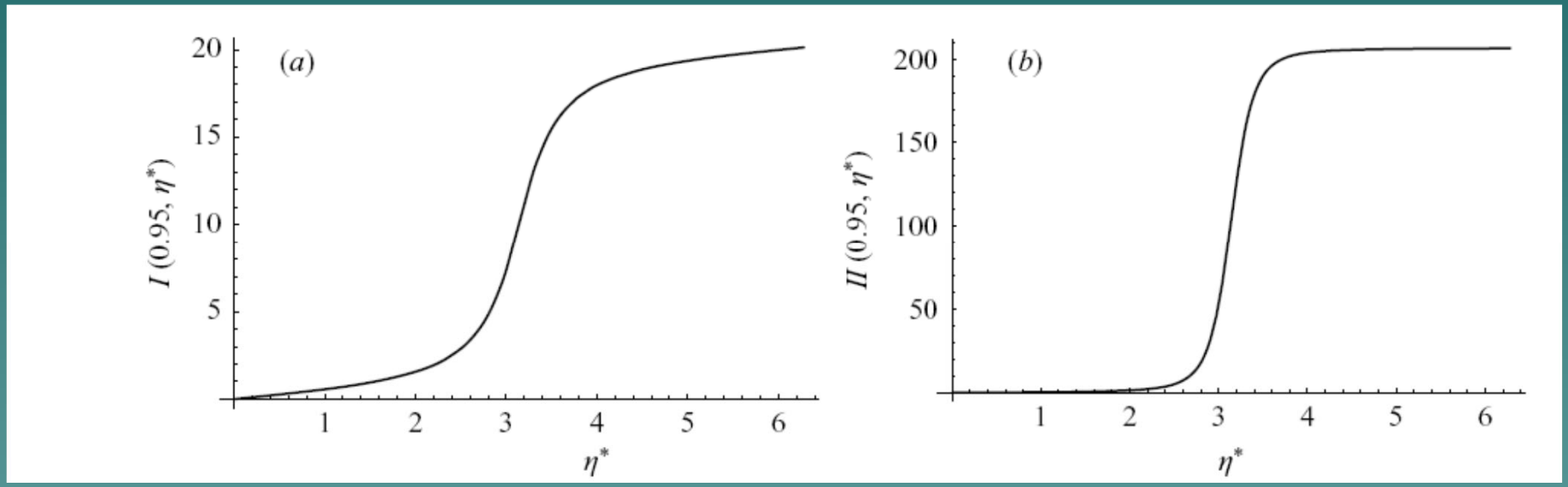
(a)
20
15
10
5
$I(0.95, \eta^*)$
1
2
3
4
5
6
η^*
(b)
200
150
100
50
$II(0.95, \eta^*)$
1
2
3
4
5
6
η^*

$$\chi = \chi(r)$$

Single Valued

$$\eta = \phi + C(z, R)$$

Double Non Single Valued

$$C = \frac{1}{\alpha}\left[\frac{r\Psi''}{\Psi'} I(r, \eta^*) + II(r, \eta^*)\right]$$

Question

Can we have a magnetic field represented by two single valued functions in the Sakurai representation?

Answer: Yes, consider a ball with stripes which are the magnetic field lines.

$$\vec{B} = B_0 \sin(\theta)\hat{\phi}$$

$$\chi = \frac{B_0 r^2}{2\pi}.$$

Single Valued (r the ball radius)

$$\eta = -\pi \cos(\theta).$$

Single Valued
(θ the elevation angle)